SAER ELETTROPOMPE	Technical data KF 5	Revision no	Page: 1

	Receiver	From
Company name		
Respons. Department		
Person in charge		
Phone number		
Fax no		
E-mail address		

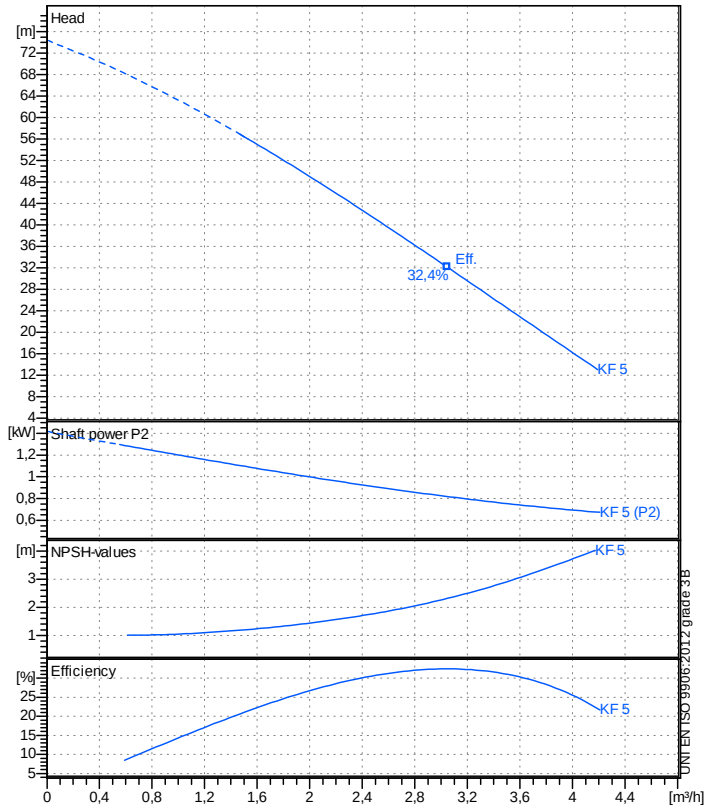

Operating data specification

Nominal flow	m³/h	0
Nominal head	m	0
Static head	m	0
NPSH - value of plant	m	0
Inlet pressure	bar	0,09793
Fluid		Water, pure
Operating temperature t A	°C	20
Density at t A	kg/m³	998,3
Kin. viscosity at t A	mm²/s	1,005

Pump

Pump name			KF 5	
Size				
Design				
Speed	rpm	2850	No of stages	1
Impeller type			Peripheral impeller	
Flow	Nominal		m³/h	
	Max-		m³/h	4,19
	Min-		m³/h	1,5
Head	Nominal		m	
	Max-		m	56,4
	Min-		m	13
Head H(Q=0)			m	74,4
NPSH 3%			m	
Max. working pressure			bar	7,28
Shaft power			kW	
Efficiency			%	
Max absorbed power			kW	1,2882

Materials Pump

Shaft	Stainless steel AISI 420 (1.4028)
Impeller	Brass
Pump body	Cast iron EN-GJL-200
Support	Cast iron EN-GJL-200
OR	NBR Rubber
Mechanical seal	BXPG (Gra/Cer/NBR)

Motor		Frame size		80	
Manufacturer / Type		SAER 80 2 - 1,1 1~			
Rated power	kW	1,1	Efficiency 4/4		0 %
Electric current	A	9 A	Speed	rpm	2950
Electric voltage	V	230 V	1~	Hz	50
Starting mode		Unknown			
Degree of protection		IP 44	Insulation class		F

Dimensions in mm

a	45
DNA	G 1"
DNM	G 1"
f	274
H	200
h1	80
h2	175
m1	124
m2	100
n1	152
n2	125
od	9
w	69

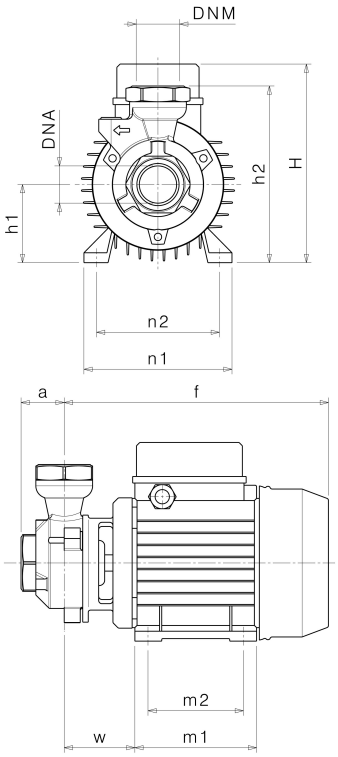

Remarks:

Project	Project ID	Created by	Created on **2019-02-13**	Last update